RA.02R

Our EPD Group 3 – Rhine Range for Wall only comes in hundreds of different designs, colours, slip ratings and finishes. Much of the range is accredited to rigorous eco-friendly standards including high recycled content, LEED/BREEAM etc to help specifiers meet the sustainability goals of their clients.

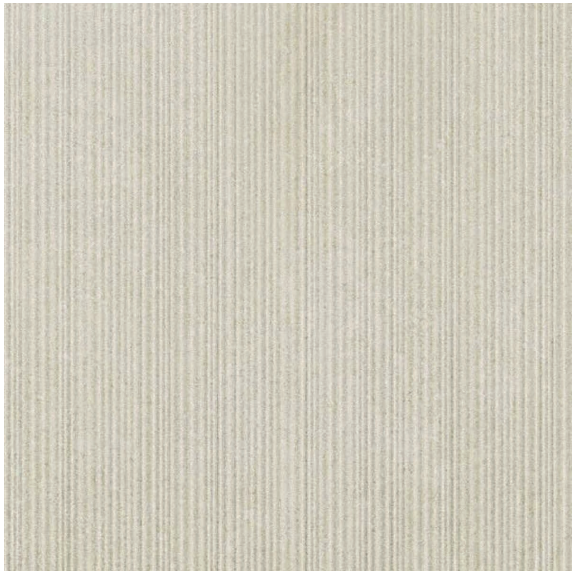



MOBILE SAMPLE LIBRARY REFERENCE

Stone Look
Wall Only
EPD Group 3 - Rhine Range

Rain

Properties

Chemical Resistant
Frost Resistant
Thermal Shock Resistant
More Colours Available
EPD GROUP 3 RHINE
LEED
BREEAM
EMAS
ISO 9001
ISO 14001
OVER 40% Recycled Content

Other formats available

Other finishes available

Sizes available

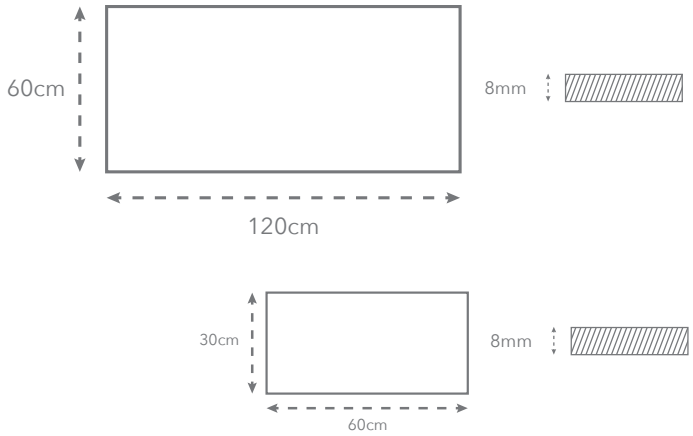

ECO FRIENDLY TILES®
The planet, covered

Eco Friendly Tiles UK Ltd

+44 (0) 203 143 5675
info@ecofriendlytiles.co.uk
ecofriendlytiles.co.uk

Technical Specification
Code: RA.02R

Eco Friendly Tiles UK Ltd

+44 (0) 203 143 5675
info@ecofriendlytiles.co.uk
www.ecofriendlytiles.co.uk

Physical & chemical properties	Norm/test method	Required Standard	Results
Length and Width	EN ISO 10545-2	± 0.6% max	±0.2% max
Thickness	EN ISO10545-2	±5.0% max	±5.0% max
Linearity	EN ISO 10545-2	±0.5% max	±0.2% max
Wedging	EN ISO10545-2	±0.6% max	±0.2% max
Warpage	EN ISO10545-2	±0.5% max	±0.2% max
Water Absorption	EN ISO 10545-3	≤0.5%	<0.05%
Bending Strength	EN ISO 10545-4	≥35N/mm^2	>48N/mm^2
Resistance to Deep Abrasion	EN ISO 10545-6	≤175N/mm^2	140mm^2
Thermal Expansion Coefficient	EN ISO 10545-8	-	7MK^{-1}
Thermal Shock Resistance	EN ISO 10545.9	-	Resistant
Frost Resistance	EN ISO 10545-12	-	Frost Resistant
Chemical Resistance	EN ISO 10545-13	-	Uneffected
Stain Resistance	EN ISO 10545-14		Class 5
			-

Certifications

EN 14411

This technical information sheet is not a guarantee of performance and is not a warranty, either explicit or implicit. Rather, it tries to summarize for the designer, installer or developer the technical data provided to Eco Friendly Tiles by the independent tile manufacturer. This information may not be applicable in all geographical areas. It is the responsibility of those individuals who are referring to this document to independently research and determine which tiles are suitable for a given project according to applicable British or International Standards and any governing legislative requirements. This document cannot be used as expert opinion, evidence or in any legal or administrative procedure unless authorized by Eco Friendly Tiles Ltd.