VT.449P

Our EPD Group 2 – Como Range for Floor & Wall comes in hundreds of different designs, colours, slip ratings and finishes. Much of the range is accredited to rigorous eco-friendly standards (including LEED/BREEAM etc) to help specifiers meet the sustainability goals of their clients.

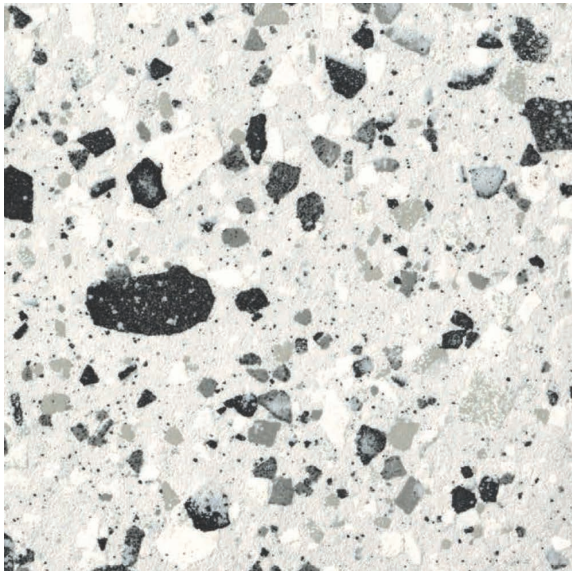



MOBILE SAMPLE LIBRARY REFERENCE

Terrazzo Look
Polished Finish
EPD Group 2 - Como Range

Polished

Properties

Carbon Offset
Chemical Resistant
Frost Resistant
Thermal Shock Resistant
More Colours Available
EPD GROUP 2 COMO
BREEAM
LEED
EMAS
ISO 14001
ISO 9001
UP TO 40% Recycled Content

Other formats

Mosaic
Decor

Other finishes

Natural
Bush Hammered

Sizes available

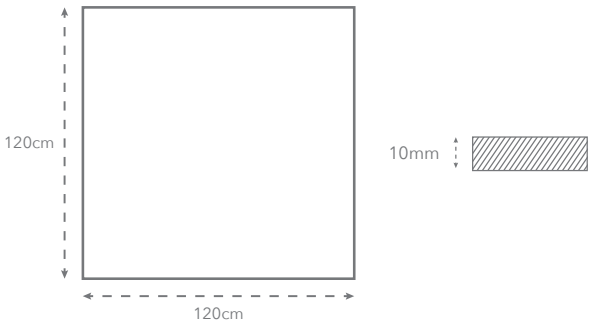

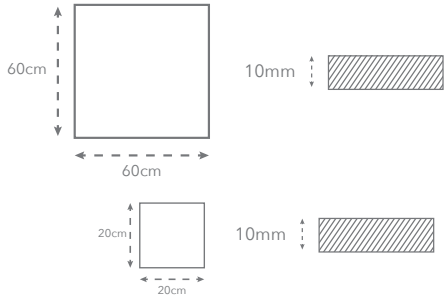

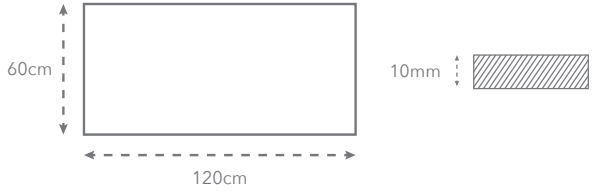



ECO FRIENDLY TILES®
The planet, covered

Eco Friendly Tiles UK Ltd

+44 (0) 203 143 5675
info@ecofriendlytiles.co.uk
ecofriendlytiles.co.uk

Technical Specification
Code: VT.449P

ECO FRIENDLY TILES®
The planet, covered

Eco Friendly Tiles UK Ltd

+44 (0) 203 143 5675
info@ecofriendlytiles.co.uk
ecofriendlytiles.co.uk

Physical & chemical properties	Norm/test method	Required Standard	Results
Thickness	EN ISO 10545-2	± 5.0% / ± 0.5mm	± 5.0%
Length and Width	EN ISO 10545-2	± 0.5% / ± 1.5mm	± 0.2%
Rectangularity	EN ISO 10545-2	± 0.5% / ± 2.0mm	± 0.2%
Warpage	EN ISO 10545-2	± 0.5% / ± 2.0mm	± 0.2%
Water absorption	EN ISO 10545-3	≤ 0.5%	≤ 0.06%
Flexion Resistance	EN ISO 10545-4	≥ 35 N/mm^2	≥ 50 N/mm^2
Abrasion Resistance	EN ISO 10545-6	175mm^3	142mm^3
Coefficient of Linear Thermal Expansion	EN ISO 10545-8	≤ $9x10^{-6}$ $°C^{-1}$	$6.5x10^{-6}$ $°C^{-1}$
Frost Resistance	EN ISO 10545-12	UB Min.	Resistant
Resistance to Chemicals	EN ISO 10545-13	GB Min	Resistant
	EN ISO 10545-14	Min Class 3	Class 5
Slip Resistance	DIN 51130	-	-
	BS 7976-2:2002 Pendulum	-	-

Certifications

EN 14411

This technical information sheet is not a guarantee of performance and is not a warranty, either explicit or implicit. Rather, it tries to summarize for the designer, installer or developer the technical data provided to Eco Friendly Tiles by the independent tile manufacturer. This information may not be applicable in all geographical areas. It is the responsibility of those individuals who are referring to this document to independently research and determine which tiles are suitable for a given project according to applicable British or International Standards and any governing legislative requirements. This document cannot be used as expert opinion, evidence or in any legal or administrative procedure unless authorized by Eco Friendly Tiles Ltd.