6.5.B

Our EPD Group 3 – Rhine Range for Floor & Wall comes in hundreds of different designs, colours, slip ratings and finishes. Much of the range offers our revolutionary GresGrip™ finish and is accredited to rigorous eco-friendly standards (including LEED/BREEAM etc) to help specifiers meet the sustainability goals of their clients.

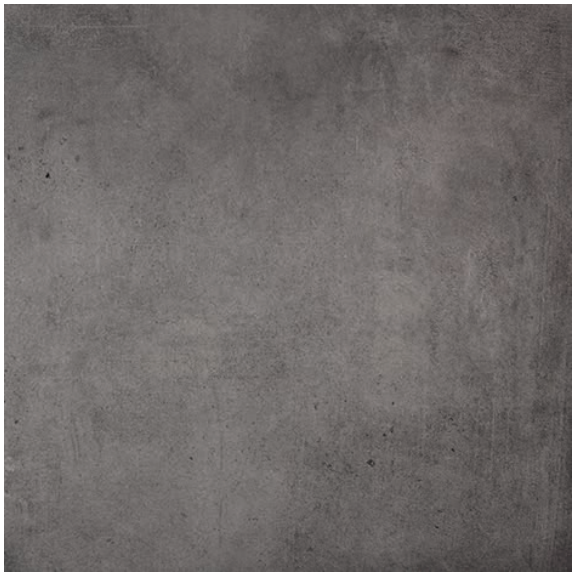



MOBILE SAMPLE LIBRARY REFERENCE

Concrete Look
High Slip, GresGrip™
EPD Group 3 - Rhine Range

GresGrip™ Natural

Properties

Carbon Offset
Chemical Resistant
Frost Resistant
Thermal Shock Resistant
More Colours Available
EPD GROUP 3 RHINE
LEED
BREEAM
EMAS
ISO 9001
ISO 14001
R10
PTV 40+
OVER 40% Recycled Content

Other formats available

20mm Paver
Mosaic
Decor

Other finishes available

GresGrip™ R11
Natural

Sizes available

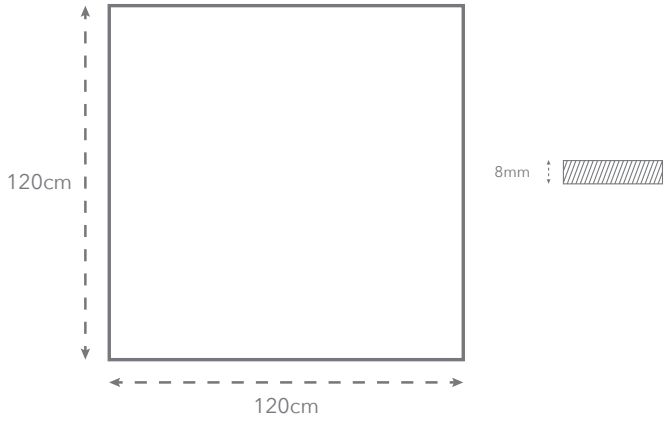

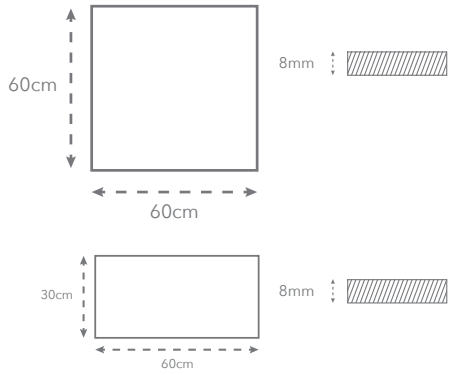

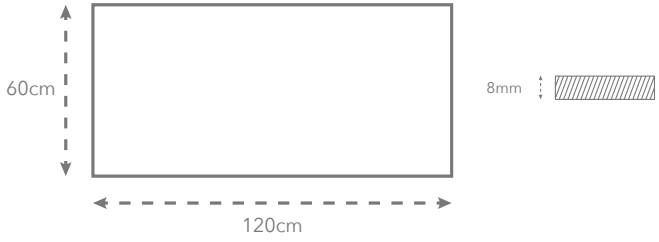

ECO FRIENDLY TILES®
The planet, covered

Eco Friendly Tiles UK Ltd

+44 (0) 203 143 5675
info@ecofriendlytiles.co.uk
ecofriendlytiles.co.uk

6.5.B

Our EPD Group 3 – Rhine Range for Floor & Wall comes in hundreds of different designs, colours, slip ratings and finishes. Much of the range offers our revolutionary GresGrip™ finish and is accredited to rigorous eco-friendly standards (including LEED/BREEAM etc) to help specifiers meet the sustainability goals of their clients.

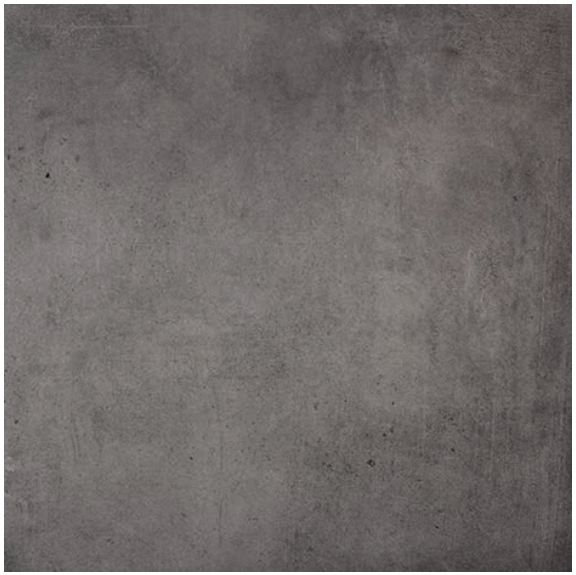



MOBILE SAMPLE LIBRARY REFERENCE

Concrete Look
High Slip
EPD Group 3 - Rhine Range

Natural

Properties

Carbon Offset
Chemical Resistant
Frost Resistant
Thermal Shock Resistant
More Colours Available
EPD GROUP 3 RHINE
LEED
BREEAM
EMAS
ISO 9001
ISO 14001
R10
OVER 40% Recycled Content

Other formats available

20mm Paver
Mosaic
Decor

Other finishes available

GresGrip™ Natural
GresGrip™ R11

Sizes available

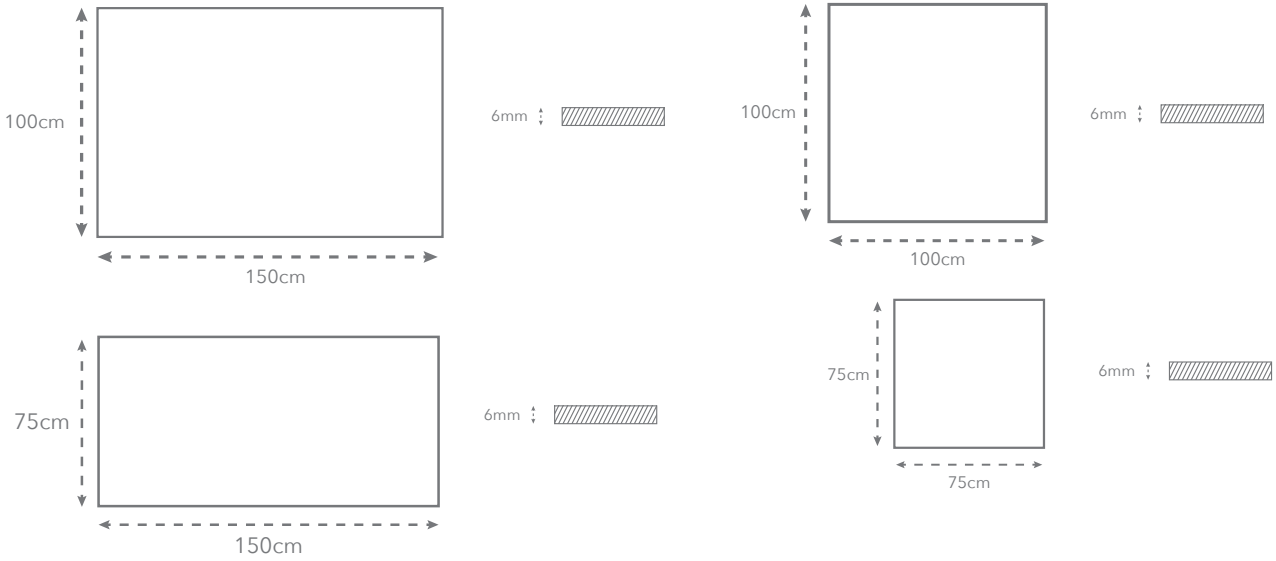

ECO FRIENDLY TILES®
The planet, covered

Eco Friendly Tiles UK Ltd

+44 (0) 203 143 5675
info@ecofriendlytiles.co.uk
ecofriendlytiles.co.uk

Technical Specification
Code: 6.5.B

ECO FRIENDLY TILES®
The planet, covered

Eco Friendly Tiles UK Ltd

+44 (0) 203 143 5675
info@ecofriendlytiles.co.uk
www.ecofriendlytiles.co.uk

Physical & chemical properties	Norm/test method	Required Standard	Results
Length and Width	EN ISO 10545-2	± 0.6% max	±0.2% max
Thickness	EN ISO10545-2	±5.0% max	±5.0% max
Water Absorption	EN ISO 10545-3	≤0.5%	<0.05%
Resistance to Deep Abrasion	EN ISO 10545-6	≤175N/mm^2	140mm^2
Thermal Expansion Coefficient	EN ISO 10545-8	-	7MK^{-1}
Frost Resistance	EN ISO 10545-12	-	Frost Resistance
Chemical Resistance	EN ISO 10545-13	UB min.	Uneffected
Slip Resistance	DIN51130	-	R10
	BS 7976-2:2002 Pendulum	-	PTV 36+/PTV 40+

* Please note that the 6mm thickness tiles do not have GresGrip™ Natural finish. They are a Natural finish and still offer R10 slip rating.

** 60x120cm, 60x60cm and 30x60cm have GresGrip™ Natural finish which offers a slip rating of R10, PTV 40+

Certifications

EN 14411

This technical information sheet is not a guarantee of performance and is not a warranty, either explicit or implicit. Rather, it tries to summarize for the designer, installer or developer the technical data provided to Eco Friendly Tiles by the independent tile manufacturer. This information may not be applicable in all geographical areas. It is the responsibility of those individuals who are referring to this document to independently research and determine which tiles are suitable for a given project according to applicable British or International Standards and any governing legislative requirements. This document cannot be used as expert opinion, evidence or in any legal or administrative procedure unless authorized by Eco Friendly Tiles Ltd.